Introduction to Robotics

Lecture 5: Forward Kinematics & Introduction to Jacobians

Konstantinos Chatzilygeroudis - costashatz@upatras.gr

Department of Electrical and Computer Engineering
University of Patras

Template made by Panagiotis Papagiannopoulos

Forward Kinematics (1)

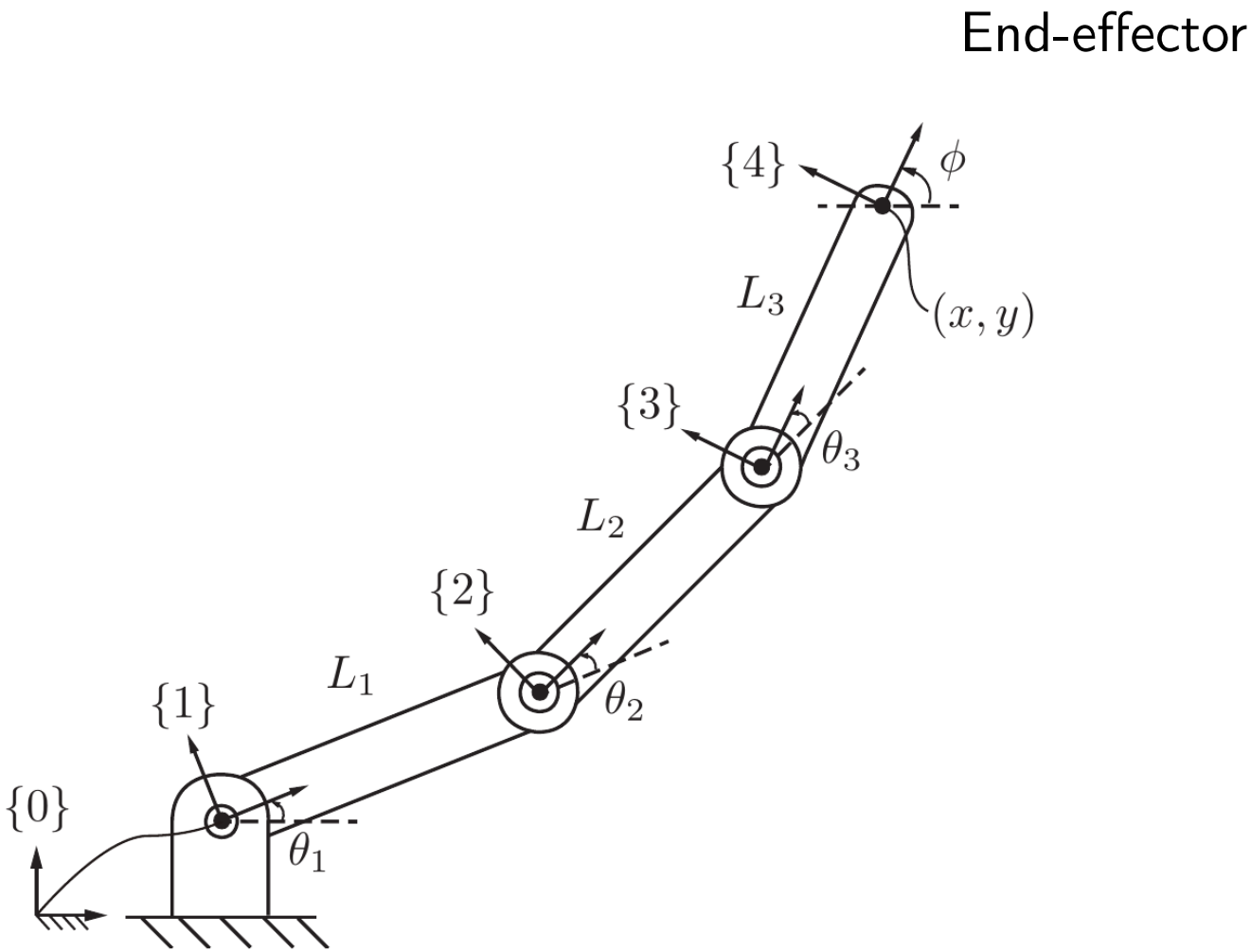

Source: Modern Robotics: Mechanics, Planning, and Control, *Kevin M. Lynch and Frank C. Park*, 2017, Cambridge University Press.

Forward Kinematics (2)

We can use our transformation matrices:

End-effector

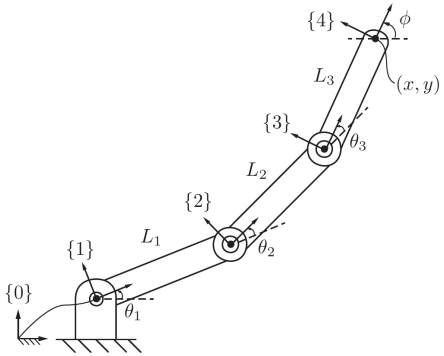

Source: Modern Robotics: Mechanics, Planning, and Control, *Kevin M. Lynch and Frank C. Park*, 2017, Cambridge University Press.

$$(x, y, \phi) \equiv \boldsymbol{T}_{04} = \boldsymbol{T}_{01}\boldsymbol{T}_{12}\boldsymbol{T}_{23}\boldsymbol{T}_{34}$$

where

$$\boldsymbol{T}_{01} = \begin{bmatrix} cos\theta_1 & -sin\theta_1 & 0 & 0 \\ sin\theta_1 & cos\theta_1 & 0 & 0 \\ 0 & 0 & 1 & 0 \\ 0 & 0 & 0 & 1 \end{bmatrix} \quad \boldsymbol{T}_{12} = \begin{bmatrix} cos\theta_2 & -sin\theta_2 & 0 & L_1 \\ sin\theta_2 & cos\theta_2 & 0 & 0 \\ 0 & 0 & 1 & 0 \\ 0 & 0 & 0 & 1 \end{bmatrix}$$

$$\boldsymbol{T}_{23} = \begin{bmatrix} cos\theta_3 & -sin\theta_3 & 0 & L_2 \\ sin\theta_3 & cos\theta_3 & 0 & 0 \\ 0 & 0 & 1 & 0 \\ 0 & 0 & 0 & 1 \end{bmatrix} \quad \boldsymbol{T}_{34} = \begin{bmatrix} 1 & 0 & 0 & L_3 \\ 0 & 1 & 0 & 0 \\ 0 & 0 & 1 & 0 \\ 0 & 0 & 0 & 1 \end{bmatrix}$$

Forward Kinematics (3)

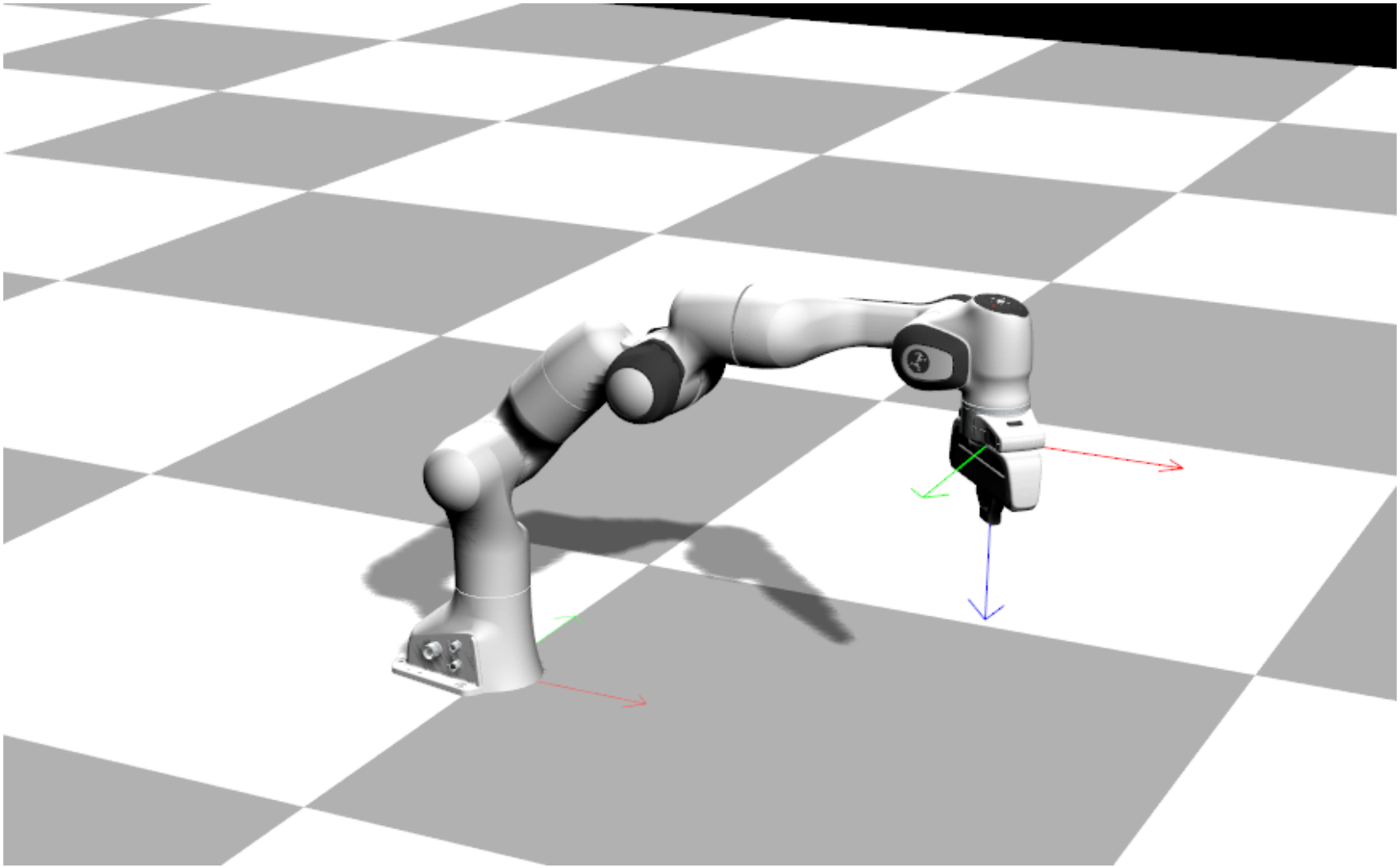

Forward Kinematics - Alternative Approach

- Let's define $\boldsymbol{M}$, the transformation of the end-effector frame when all joints are in the zero or home configuration

End-effector

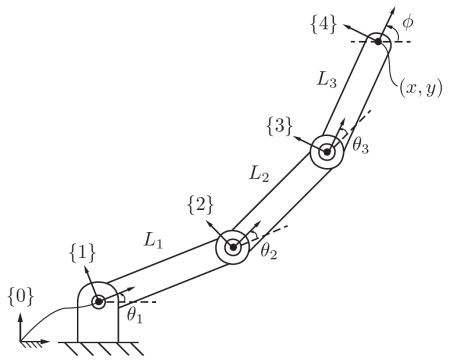

Source: Modern Robotics: Mechanics, Planning, and Control, *Kevin M. Lynch and Frank C. Park*, 2017, Cambridge University Press.

Forward Kinematics - Alternative Approach

End-effector

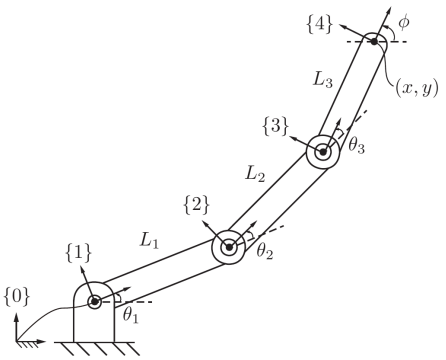

Source: Modern Robotics: Mechanics, Planning, and Control, *Kevin M. Lynch and Frank C. Park*, 2017, Cambridge University Press.

- Let's define $\boldsymbol{M}$, the transformation of the end-effector frame when all joints are in the zero or home configuration
- $\boldsymbol{M} = \begin{bmatrix} 1 & 0 & 0 & L_1 + L_2 + L_3 \\ 0 & 1 & 0 & 0 \\ 0 & 0 & 1 & 0 \\ 0 & 0 & 0 & 1 \end{bmatrix}$
- Each joint defines a movement around screw axis with respect to the base frame

Forward Kinematics - Alternative Approach

End-effector

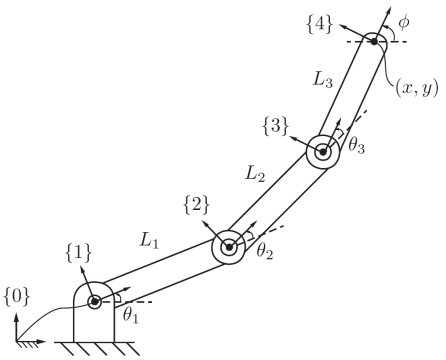

Source: Modern Robotics: Mechanics, Planning, and Control, *Kevin M. Lynch and Frank C. Park*, 2017, Cambridge University Press.

- Let's define $\boldsymbol{M}$, the transformation of the end-effector frame when all joints are in the zero or home configuration
- $\boldsymbol{M} = \begin{bmatrix} 1 & 0 & 0 & L_1 + L_2 + L_3 \\ 0 & 1 & 0 & 0 \\ 0 & 0 & 1 & 0 \\ 0 & 0 & 0 & 1 \end{bmatrix}$
- Each joint defines a movement around screw axis with respect to the base frame
- $\mathcal{S}_3 = \begin{bmatrix} \boldsymbol{r}_3 \\ \boldsymbol{\rho}_3 \end{bmatrix} = \begin{bmatrix} 0 & 0 & 1 & 0 & -(L_1 + L_2) & 0 \end{bmatrix}^T$

Forward Kinematics - Alternative Approach

End-effector

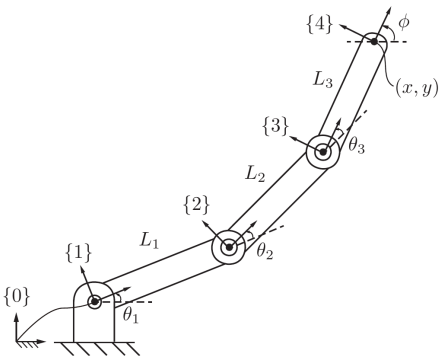

Source: Modern Robotics: Mechanics, Planning, and Control, *Kevin M. Lynch and Frank C. Park*, 2017, Cambridge University Press.

- Let's define $\boldsymbol{M}$, the transformation of the end-effector frame when all joints are in the zero or home configuration
- $\boldsymbol{M} = \begin{bmatrix} 1 & 0 & 0 & L_1 + L_2 + L_3 \\ 0 & 1 & 0 & 0 \\ 0 & 0 & 1 & 0 \\ 0 & 0 & 0 & 1 \end{bmatrix}$
- Each joint defines a movement around screw axis with respect to the base frame
- $\mathcal{S}_3 = \begin{bmatrix} \boldsymbol{r}_3 \\ \boldsymbol{\rho}_3 \end{bmatrix} = \begin{bmatrix} 0 & 0 & 1 & 0 & -(L_1 + L_2) & 0 \end{bmatrix}^T$
- $\mathcal{S}_2 = \begin{bmatrix} \boldsymbol{r}_2 \\ \boldsymbol{\rho}_2 \end{bmatrix} = \begin{bmatrix} 0 & 0 & 1 & 0 & -L_1 & 0 \end{bmatrix}^T$
- $\mathcal{S}_1 = \begin{bmatrix} \boldsymbol{r}_1 \\ \boldsymbol{\rho}_1 \end{bmatrix} = \begin{bmatrix} 0 & 0 & 1 & 0 & 0 & 0 \end{bmatrix}^T$

Forward Kinematics - Alternative Approach

End-effector

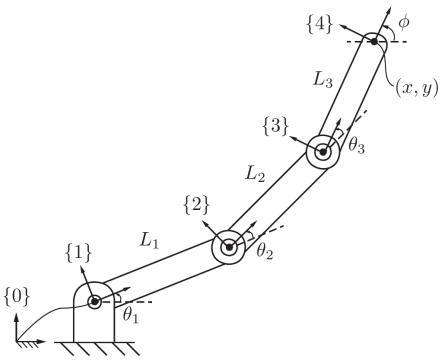

Source: Modern Robotics: Mechanics, Planning, and Control, *Kevin M. Lynch and Frank C. Park*, 2017, Cambridge University Press.

- Let's define $\boldsymbol{M}$, the transformation of the end-effector frame when all joints are in the zero or home configuration
- $\boldsymbol{M} = \begin{bmatrix} 1 & 0 & 0 & L_1 + L_2 + L_3 \\ 0 & 1 & 0 & 0 \\ 0 & 0 & 1 & 0 \\ 0 & 0 & 0 & 1 \end{bmatrix}$
- Each joint defines a movement around screw axis with respect to the base frame
- $\mathcal{S}_3 = \begin{bmatrix} \boldsymbol{r}_3 \\ \boldsymbol{\rho}_3 \end{bmatrix} = \begin{bmatrix} 0 & 0 & 1 & 0 & -(L_1 + L_2) & 0 \end{bmatrix}^T$
- $\mathcal{S}_2 = \begin{bmatrix} \boldsymbol{r}_2 \\ \boldsymbol{\rho}_2 \end{bmatrix} = \begin{bmatrix} 0 & 0 & 1 & 0 & -L_1 & 0 \end{bmatrix}^T$
- $\mathcal{S}_1 = \begin{bmatrix} \boldsymbol{r}_1 \\ \boldsymbol{\rho}_1 \end{bmatrix} = \begin{bmatrix} 0 & 0 & 1 & 0 & 0 & 0 \end{bmatrix}^T$
- $\boldsymbol{T}_{04} = \exp(\hat{\mathcal{S}}_1\theta_1)\exp(\hat{\mathcal{S}}_2\theta_2)\exp(\hat{\mathcal{S}}_3\theta_3)\boldsymbol{M}$

Product of Exponentials (PoE)

Screw Axes in the Base Frame:

- We define the base frame s, and the end-effector frame b
- We define $\boldsymbol{M}$, the transformation of the end-effector frame when all joints are in the zero or home configuration
- We find the screw axis for each joint, $\mathcal{S}_i$. For revolute joints:
  - We first find the axis of rotation in the base frame, $\boldsymbol{r}$
  - We then select any point on this axis, $\boldsymbol{q}$ and express it in the base frame
  - $\boldsymbol{\rho} = -\boldsymbol{r} \times \boldsymbol{q}$
- The desired transformation is given by:

$$\boldsymbol{T} = \exp(\hat{\mathcal{S}}_1\theta_1)\exp(\hat{\mathcal{S}}_2\theta_2)\cdots\exp(\hat{\mathcal{S}}_N\theta_N)\boldsymbol{M}$$

PoE - 3R Example

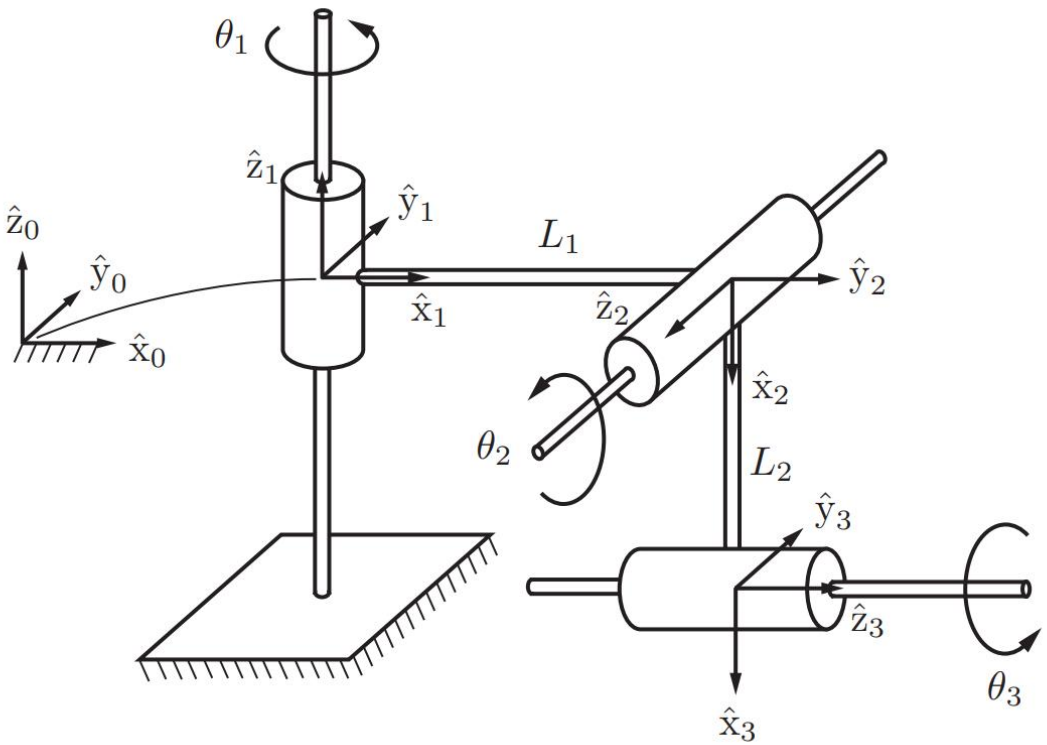

Source: Modern Robotics: Mechanics, Planning, and Control, *Kevin M. Lynch and Frank C. Park*, 2017, Cambridge University Press.

PoE - 3R Example (2)

- Let's define $\boldsymbol{M}$, the transformation of the end-effector frame when all joints are in the zero or home configuration

PoE - 3R Example (2)

- Let's define $\boldsymbol{M}$, the transformation of the end-effector frame when all joints are in the zero or home configuration
- $\boldsymbol{M} = \begin{bmatrix} 0 & 0 & 1 & L_1 \\ 0 & 1 & 0 & 0 \\ -1 & 0 & 0 & -L_2 \\ 0 & 0 & 0 & 1 \end{bmatrix}$
- Each joint defines a movement around screw axis with respect to the base frame

PoE - 3R Example (2)

- Let's define $\boldsymbol{M}$, the transformation of the end-effector frame when all joints are in the zero or home configuration
- $\boldsymbol{M} = \begin{bmatrix} 0 & 0 & 1 & L_1 \\ 0 & 1 & 0 & 0 \\ -1 & 0 & 0 & -L_2 \\ 0 & 0 & 0 & 1 \end{bmatrix}$
- Each joint defines a movement around screw axis with respect to the base frame
- $\mathcal{S}_1 = \begin{bmatrix} \boldsymbol{r}_1 \\ \boldsymbol{\rho}_1 \end{bmatrix} = \begin{bmatrix} 0 & 0 & 1 & 0 & 0 & 0 \end{bmatrix}^T$

PoE - 3R Example (2)

- Let's define $\boldsymbol{M}$, the transformation of the end-effector frame when all joints are in the zero or home configuration
- $\boldsymbol{M} = \begin{bmatrix} 0 & 0 & 1 & L_1 \\ 0 & 1 & 0 & 0 \\ -1 & 0 & 0 & -L_2 \\ 0 & 0 & 0 & 1 \end{bmatrix}$
- Each joint defines a movement around screw axis with respect to the base frame
- $\mathcal{S}_1 = \begin{bmatrix} \boldsymbol{r}_1 \\ \boldsymbol{\rho}_1 \end{bmatrix} = \begin{bmatrix} 0 & 0 & 1 & 0 & 0 & 0 \end{bmatrix}^T$
- $\boldsymbol{r}_2 = \begin{bmatrix} 0 & -1 & 0 \end{bmatrix}^T$, pick $\boldsymbol{q}_2 = \begin{bmatrix} L_1 & 0 & 0 \end{bmatrix}^T$, thus $\boldsymbol{\rho}_2 = -\boldsymbol{r} \times \boldsymbol{q}_2$ and $\mathcal{S}_2 = \begin{bmatrix} \boldsymbol{r}_2 \\ \boldsymbol{\rho}_2 \end{bmatrix} = \begin{bmatrix} 0 & -1 & 0 & 0 & 0 & -L_1 \end{bmatrix}^T$

PoE - 3R Example (2)

- Let's define $\boldsymbol{M}$, the transformation of the end-effector frame when all joints are in the zero or home configuration
- $\boldsymbol{M} = \begin{bmatrix} 0 & 0 & 1 & L_1 \\ 0 & 1 & 0 & 0 \\ -1 & 0 & 0 & -L_2 \\ 0 & 0 & 0 & 1 \end{bmatrix}$
- Each joint defines a movement around screw axis with respect to the base frame
- $\mathcal{S}_1 = \begin{bmatrix} \boldsymbol{r}_1 \\ \boldsymbol{\rho}_1 \end{bmatrix} = \begin{bmatrix} 0 & 0 & 1 & 0 & 0 & 0 \end{bmatrix}^T$
- $\boldsymbol{r}_2 = \begin{bmatrix} 0 & -1 & 0 \end{bmatrix}^T$, pick $\boldsymbol{q}_2 = \begin{bmatrix} L_1 & 0 & 0 \end{bmatrix}^T$, thus $\boldsymbol{\rho}_2 = -\boldsymbol{r} \times \boldsymbol{q}_2$ and $\mathcal{S}_2 = \begin{bmatrix} \boldsymbol{r}_2 \\ \boldsymbol{\rho}_2 \end{bmatrix} = \begin{bmatrix} 0 & -1 & 0 & 0 & 0 & -L_1 \end{bmatrix}^T$
- $\mathcal{S}_3 = \begin{bmatrix} \boldsymbol{r}_3 \\ \boldsymbol{\rho}_3 \end{bmatrix} = \begin{bmatrix} 1 & 0 & 0 & 0 & -L_2 & 0 \end{bmatrix}^T$

PoE - RRPRRR Example

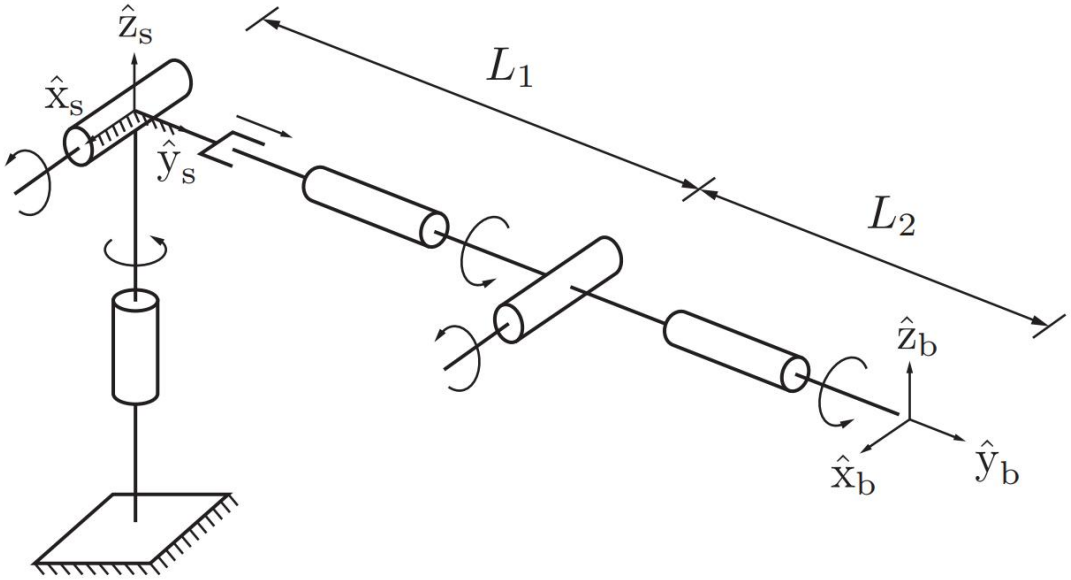

Source: Modern Robotics: Mechanics, Planning, and Control, *Kevin M. Lynch and Frank C. Park*, 2017, Cambridge University Press.

PoE - RRPRRR Example (2)

- $\boldsymbol{M} = \begin{bmatrix} 1 & 0 & 0 & 0 \\ 0 & 1 & 0 & L_1 + L_2 \\ 0 & 0 & 1 & 0 \\ 0 & 0 & 0 & 1 \end{bmatrix}$
- $\mathcal{S}_1 = \begin{bmatrix} 0 & 0 & 1 & 0 & 0 & 0 \end{bmatrix}^T$
- $\mathcal{S}_2 = \begin{bmatrix} 1 & 0 & 0 & 0 & 0 & 0 \end{bmatrix}^T$
- $\mathcal{S}_3 = \begin{bmatrix} 0 & 0 & 0 & 0 & 1 & 0 \end{bmatrix}^T$
- $\mathcal{S}_4 = \begin{bmatrix} 0 & 1 & 0 & 0 & 0 & 0 \end{bmatrix}^T$
- $\mathcal{S}_5 = \begin{bmatrix} 1 & 0 & 0 & 0 & 0 & -L_1 \end{bmatrix}^T$
- $\mathcal{S}_6 = \begin{bmatrix} 0 & 1 & 0 & 0 & 0 & 0 \end{bmatrix}^T$

Product of Exponentials (PoE) - Body Frame

Screw Axes in the Body Frame:

- We define the base frame s, and the end-effector frame b
- We define $\boldsymbol{M}$, the transformation of the end-effector frame when all joints are in the zero or home configuration
- We find the screw axis for each joint, $\mathcal{B}_i$ expressed in **body frame**!
- The desired transformation is given by:

$$\boldsymbol{T} = \boldsymbol{M} \exp(\hat{\mathcal{B}}_1 \theta_1) \exp(\hat{\mathcal{B}}_2 \theta_2) \cdots \exp(\hat{\mathcal{B}}_N \theta_N)$$

Product of Exponentials (PoE) - Body Frame

Screw Axes in the Body Frame:

- We define the base frame s, and the end-effector frame b
- We define $\boldsymbol{M}$, the transformation of the end-effector frame when all joints are in the zero or home configuration
- We find the screw axis for each joint, $\mathcal{B}_i$ expressed in **body frame**!
- The desired transformation is given by:

$$\boldsymbol{T} = \boldsymbol{M} \exp(\hat{\mathcal{B}}_1 \theta_1) \exp(\hat{\mathcal{B}}_2 \theta_2) \cdots \exp(\hat{\mathcal{B}}_N \theta_N)$$

- $\mathcal{B}_i = [Ad_{\boldsymbol{M}^{-1}}]\mathcal{S}_i$

PoE - 6R Example

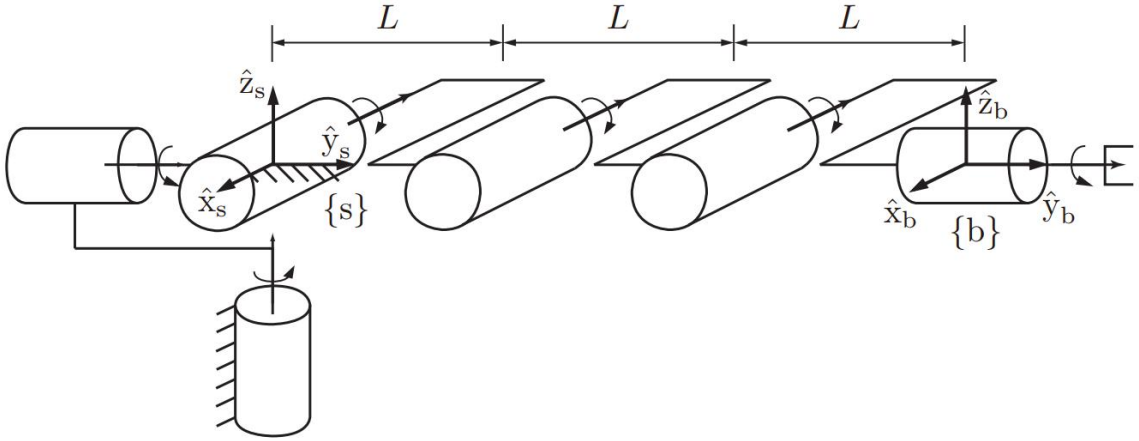

Source: Modern Robotics: Mechanics, Planning, and Control, *Kevin M. Lynch and Frank C. Park*, 2017, Cambridge University Press.

PoE - 6R Example (2)

- $\boldsymbol{M} = \begin{bmatrix} 1 & 0 & 0 & 0 \\ 0 & 1 & 0 & 3L \\ 0 & 0 & 1 & 0 \\ 0 & 0 & 0 & 1 \end{bmatrix}$
- Each joint defines a movement around screw axis with respect to the **body frame**

PoE - 6R Example (2)

- $\boldsymbol{M} = \begin{bmatrix} 1 & 0 & 0 & 0 \\ 0 & 1 & 0 & 3L \\ 0 & 0 & 1 & 0 \\ 0 & 0 & 0 & 1 \end{bmatrix}$
- Each joint defines a movement around screw axis with respect to the **body frame**
- $\mathcal{B}_1 = \begin{bmatrix} \boldsymbol{r}_1 \\ \boldsymbol{\rho}_1 \end{bmatrix} = \begin{bmatrix} 0 & 0 & 1 & -3L & 0 & 0 \end{bmatrix}^T$

PoE - 6R Example (2)

- $\boldsymbol{M} = \begin{bmatrix} 1 & 0 & 0 & 0 \\ 0 & 1 & 0 & 3L \\ 0 & 0 & 1 & 0 \\ 0 & 0 & 0 & 1 \end{bmatrix}$
- Each joint defines a movement around screw axis with respect to the **body frame**
- $\mathcal{B}_1 = \begin{bmatrix} \boldsymbol{r}_1 \\ \boldsymbol{\rho}_1 \end{bmatrix} = \begin{bmatrix} 0 & 0 & 1 & -3L & 0 & 0 \end{bmatrix}^T$
- $\mathcal{B}_2 = \begin{bmatrix} 0 & 1 & 0 & 0 & 0 & 0 \end{bmatrix}^T$
- $\mathcal{B}_3 = \begin{bmatrix} -1 & 0 & 0 & 0 & 0 & -3L \end{bmatrix}^T$
- $\mathcal{B}_4 = \begin{bmatrix} -1 & 0 & 0 & 0 & 0 & -2L \end{bmatrix}^T$
- $\mathcal{B}_5 = \begin{bmatrix} -1 & 0 & 0 & 0 & 0 & -L \end{bmatrix}^T$
- $\mathcal{B}_6 = \begin{bmatrix} 0 & 1 & 0 & 0 & 0 & 0 \end{bmatrix}^T$

Universal Robot Description Format (1)

A URDF file is basically an XML file that describes our robot(s):

- It began as part of ROS, but now it is independent
- It allows modeling for the kinematic, dynamic and geometric parts of our robot
- It supports only open-chain structures (kinematic trees)
- Most robot softwares can read URDF files

Universal Robot Description Format (2)

Every URDF file define joints and links:

- **Joints**:
  - Connect exactly 2 links: the *parent link* with the *child link*
  - Types: *revolute, prismatic* and *fixed*
  - *origin frame*: describes the pose of the child link with respect to the parent link in the *zero* (rest) configuration of the joint
  - *axis* (3D vector): descibes the axis of motion of the joint
  - ...
- **Links**:
  - *Intertial parameters*: mass, center of mass, ... (very important for accurate simulation)
  - Geometry for visualization
  - Geometry for collision detection (very important for simulation)
  - ...

Universal Robot Description Format (3)

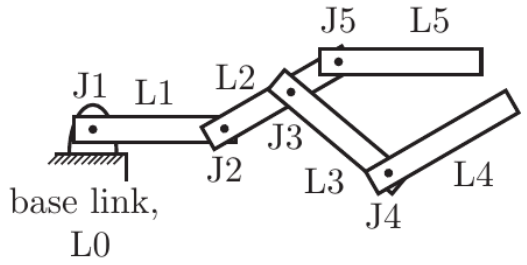

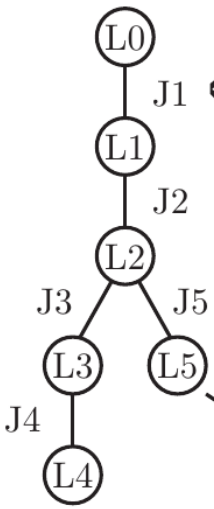

`parent:` J1's parent link, L0
`child:` J1's child link, L1
`origin:` the x–y–z and roll–pitch–yaw coords of the L1 frame relative to the L0 frame when J1 is zero
`axis:` the x–y–z unit vector along the rotation axis in the L1 frame

`mass:` L5's mass
`origin:` the x–y–z and roll–pitch–yaw coords of a frame at the center of mass of L5, relative to the L5 frame
`inertia:` six unique entries of inertia matrix in the `origin` frame

Source: Modern Robotics: Mechanics, Planning, and Control, *Kevin M. Lynch and Frank C. Park*, 2017, Cambridge University Press.

Introduction to Jacobians

Let's assume that the *end-effector* of our robot is moving with velocity $\dot{\boldsymbol{x}}$[1]. Let's also write the forward kinematics problem as a function of time:

$$\boldsymbol{x}(t) = f_{fk}(\boldsymbol{q}(t))$$

where f_{fk} is the function that gives us the forward kinematics, $\boldsymbol{x} \in \mathbb{R}^m$ the pose of the end-effector, and $\boldsymbol{q} \in \mathbb{R}^n$ the joint values of the robot. If we take the derivative over time:

$$\begin{aligned}\dot{\boldsymbol{x}} &= \frac{\partial f_{fk}(\boldsymbol{q})}{\partial \boldsymbol{q}} \frac{\partial \boldsymbol{q}(t)}{\partial t} \\ &= \boldsymbol{J}(\boldsymbol{q})\dot{\boldsymbol{q}}\end{aligned}$$

where $\boldsymbol{J}(\boldsymbol{q}) \in \mathbb{R}^{m \times n}$ is the Jacobian matrix.

[1] This is an abstract velocity here.

2D Jacobian Example

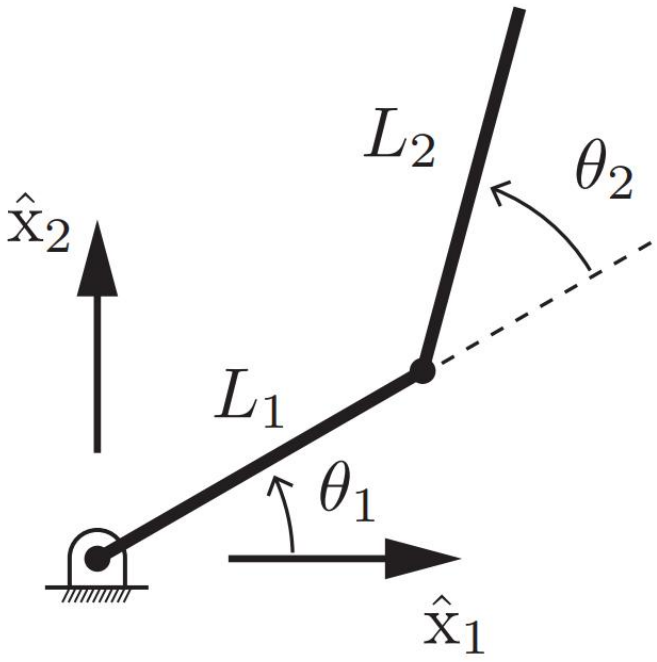

Source: Modern Robotics: Mechanics, Planning, and Control, *Kevin M. Lynch and Frank C. Park*, 2017, Cambridge University Press.

$$x_1 = L_1 \cos\theta_1 + L_2 \cos(\theta_1 + \theta_2)$$
$$x_2 = L_1 \sin\theta_1 + L_2 \sin(\theta_1 + \theta_2)$$

2D Jacobian Example (2)

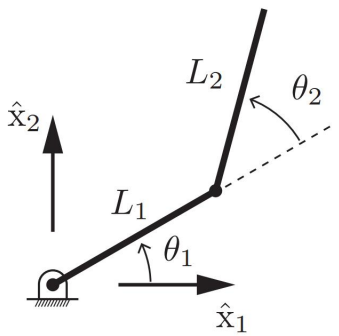

Source: Modern Robotics: Mechanics, Planning, and Control, *Kevin M. Lynch and Frank C. Park*, 2017, Cambridge University Press.

$$x_1 = L_1 \cos\theta_1 + L_2 \cos(\theta_1 + \theta_2)$$
$$x_2 = L_1 \sin\theta_1 + L_2 \sin(\theta_1 + \theta_2)$$

Let's differentiate over time:

$$\dot{x}_1 = -L_1\dot{\theta}_1 \sin\theta_1 - L_2(\dot{\theta}_1 + \dot{\theta}_2)\sin(\theta_1 + \theta_2)$$
$$\dot{x}_2 = L_1\dot{\theta}_1 \cos\theta_1 + L_2(\dot{\theta}_1 + \dot{\theta}_2)\cos(\theta_1 + \theta_2)$$

2D Jacobian Example (3)

$$x_1 = L_1 \cos\theta_1 + L_2 \cos(\theta_1 + \theta_2)$$
$$x_2 = L_1 \sin\theta_1 + L_2 \sin(\theta_1 + \theta_2)$$

Let's differentiate over time:

$$\dot{x}_1 = -L_1\dot{\theta}_1 \sin\theta_1 - L_2(\dot{\theta}_1 + \dot{\theta}_2)\sin(\theta_1 + \theta_2)$$
$$\dot{x}_2 = L_1\dot{\theta}_1 \cos\theta_1 + L_2(\dot{\theta}_1 + \dot{\theta}_2)\cos(\theta_1 + \theta_2)$$

Let's write it in matrix form:

$$\begin{bmatrix} \dot{x}_1 \\ \dot{x}_2 \end{bmatrix} = \begin{bmatrix} -L_1 \sin\theta_1 - L_2 \sin(\theta_1 + \theta_2) & -L_2 \sin(\theta_1 + \theta_2) \\ L_1 \cos\theta_1 + L_2 \cos(\theta_1 + \theta_2) & L_2 \cos(\theta_1 + \theta_2) \end{bmatrix} \begin{bmatrix} \dot{\theta}_1 \\ \dot{\theta}_2 \end{bmatrix}$$

$$\begin{bmatrix} \dot{x}_1 \\ \dot{x}_2 \end{bmatrix} = \boldsymbol{J}(\boldsymbol{\theta}) \begin{bmatrix} \dot{\theta}_1 \\ \dot{\theta}_2 \end{bmatrix} \Rightarrow \dot{\boldsymbol{x}} = \boldsymbol{J}(\boldsymbol{\theta})\dot{\boldsymbol{q}}$$

Geometric Jacobians

- Twist $\mathcal{V}_w$ of the end-effector expressed in world frame
- We have: $\mathcal{V}_w = \boldsymbol{J}_w(\boldsymbol{q})\dot{\boldsymbol{q}}$, where $\boldsymbol{J}_w(\boldsymbol{q}) \in \mathbb{R}^{6\times n}$
- We have: $\mathcal{V}_b = \boldsymbol{J}_b(\boldsymbol{q})\dot{\boldsymbol{q}}$, where $\boldsymbol{J}_b(\boldsymbol{q}) \in \mathbb{R}^{6\times n}$ is the Jacobian expressed in body frame
- We also have: $\boldsymbol{J}_b = [Ad_{\boldsymbol{T}_{bw}}]\boldsymbol{J}_w$ and $\boldsymbol{J}_w = [Ad_{\boldsymbol{T}_{wb}}]\boldsymbol{J}_b$

From the principle of energy conservation, we can also derive an equation for the *wrenches*:

$$\boldsymbol{\tau} = \boldsymbol{J}_w(\boldsymbol{q})^T \mathcal{F}_w$$
$$\boldsymbol{\tau} = \boldsymbol{J}_b(\boldsymbol{q})^T \mathcal{F}_b$$

where $\boldsymbol{\tau} \in \mathbb{R}^n$ are the joint torques/forces.

Bibliography

Chapter 4 and 5 from **Modern Robotics: Mechanics, Planning, and Control**, *Kevin M. Lynch and Frank C. Park*, 2017, Cambridge University Press. ebook

Thank you

- **Any Questions?**
- **Office Hours**:
  - **Tue-Thu** *(10:00-12:00)*
  - 24/7 by email (`costashatz@upatras.gr`, subject: *ECE_IR_AM*)
- **Material and Announcements**

Laboratory of Automation & Robotics